KC SUPPLY

kcsupply.com

Non-Pressure Applications

Jan 2017 - Screen Inserts Available

LH 6" Non-pressure fill cover / quick access inspection door

Cover Material Contact / External	Weld Ring	Gasket	Vent	Replacement Gasket
1 Steel / Steel	0 None	1 Buna N	0 No Vent	2526
2 SS304 / Plated	1 2" x .135" Steel	2 Hi-Temp		2808
3 SS316 / Plated	2 2" x 11 Ga. SS304	3 EPDM		4255
4 SS316L / Plated	3 2" x 10 Ga. SS316	4 Teflon		4759
5 SS304 / SS304 (plated wing nut)	4 2" x 11 Ga. SS316L	5 White Neoprene		5131

Applications: Cleanout, Fill Opening, Inspection Cover, Sampling Port
Locations: Conveyors, elevator legs, hoppers, silos, spouting, storage tanks and more
Features: Wing-nut hatch provides tight, secure closure; durable, lightweight construction
Avg. ship weight: 10 lbs **Overall Height:** 4 7/8" approximate

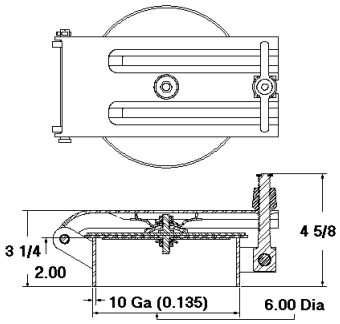

Also available with crossarm design, similar to LA series

LA 8" Non-pressure fill cover / quick access inspection door

Cover Material Contact / External	Weld Ring	Gasket	Vent	Replacement Gasket
1 Steel / Steel	0 None	1 Buna N	0 No Vent	1641
2 SS304 / Plated	1 3" x 0.135" Steel	2 Hi-Temp	1 VE0010	2568
3 SS304 / SS304	2 3" x 11 Ga. SS304	3 White Neoprene	2 NV2001	4739
4 SS316 / SS304	3 3" x 0.148 SS316	4 Teflon		2678
5 SS304L / SS304	4 3" x 11 Ga. SS304L	5 Viton		5080

Applications: Cleanout, Fill Opening, Inspection Cover, Sampling Port
Locations: Conveyors, elevator legs, hoppers, silos, spouting, storage tanks and more
Features: Ideal inspection port for conveying systems; locking hatch; no tools required to open
Avg ship weight: 11 lbs **Overall Height:** 4 1/2" approximate

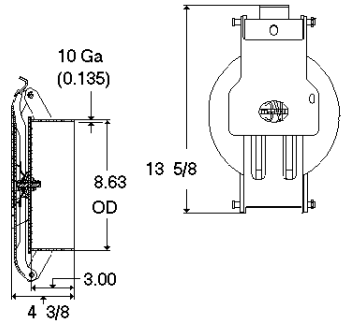

Also available with 6" diameter opening

LW 8" Non-pressure fill cover / quick access inspection door

Cover Material Contact / External	Weld Ring	Gasket	Vent	Replacement Gasket
1 Steel / Steel	0 None	1 Buna N	0 No Vent	1641
2 SS304 / Plated	1 3" x 0.135" Steel	2 Hi-Temp		2568
3 SS316 / SS304 (plated wing nut)	2 3" x 11 Ga. SS304	3 White Neoprene		4739
	3 3" x 10 Ga SS316			

Applications: Cleanout, Fill Opening, Inspection Cover, Sampling Port
Locations: Conveyors, elevator legs, hoppers, silos, spouting, storage tanks and more
Features: Wing-nut hatch provides tight, secure closure; durable, lightweight construction
Avg ship weight: 11 lb **Overall Height:** 5 5/8" approximate

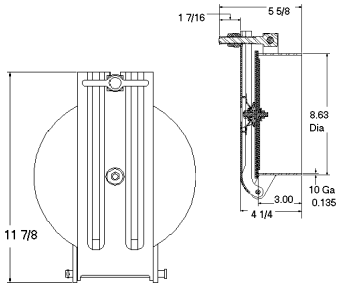

Also available with 6, 10 and 12 inch diameter openings

LB 10" Non-pressure fill cover / quick access inspection door

Cover Material Contact / External	Weld Ring	Gasket	Vent	Replacement Gasket
1 Steel / Steel	0 None	1 Buna N	0 No Vent	2561
2 Aluminum / Plated	1 3" x 10 Ga. Steel	2 Teflon	2 NV2001	2552
3 SS304 / Plated	2 3" x 0.190 Aluminum	3 Hi-Temp	3 VE0010	2575
4 SS304 / SS304	3 3" x 10 Ga. SS304	4 Black Neoprene		2553
5 SS316 / SS304	4 3" x 10 Ga. SS316	5 White Neoprene		3357
6 SS316L / SS304	5 3" x 1/4" Steel	6 EPDM		2562
	6 3" x 10 Ga. SS316L	7 Viton		2181

Applications: Cleanout, Fill Opening, Inspection Cover, Sampling Port
Locations: Conveyors, elevator legs, hoppers, silos, spouting, storage tanks and more
Features: Ideal inspection port for conveying systems; locking hatch; no tools required to open
Avg ship weight: 14 lb **Overall Height:** 4 1/2" approximate

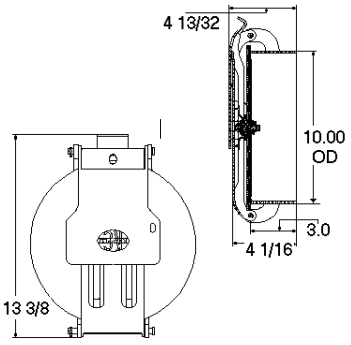

Also available in wing-nut style similar to LH and LW series

LBFS 10" Non-pressure fill cover / quick access inspection door with safety screen

Cover Material Contact / External	Weld Ring	Gasket	Vent	Replacement Gasket
1 Steel / Steel	0 None	1 Buna N	0 No Vent	2561

Applications: Cleanout, Fill Opening, Inspection Cover, Sampling Port
Locations: Conveyors, elevator legs, hoppers, silos, spouting, storage tanks and more
Features: Bolt-on flange allows for installation in areas in which welding is prohibitive
Removable safety screen helps prevent improper entry into equipment
Avg ship weight: 20 lbs **Overall Height:** 4 1/2" approximate

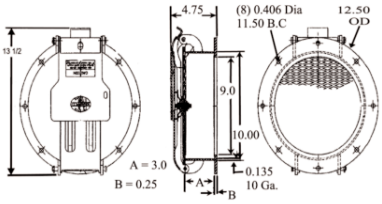

Also available in 16 and 20 inch diameter flanged covers (less safety screen)

1.800.KC.SUPPLY
1.800.527.8775
• 816.753.7676 • Fax 816.753.0444
kcsupply@kcsupply.com

Non-Pressure Applications

Jan 2017 - Screen Inserts Available

kcsupply.com

LS 12" Non-pressure fill cover / quick access inspection door

Cover Material Contact / External	Weld Ring	Gasket	Vent
1 Steel / Steel	0 None	1 Buna N	0 No Vent
2 SS304 / Plated	1 3" x 10 Ga. Steel	2 Hi-Temp	
3 SS304 / SS304	3 3" x 10 Ga. SS304	5 White Neoprene	
5 SS316 / SS304	4 3" x 10 Ga. SS316		
6 SS316L / SS304	5 3" x 10 Ga. SS316L		

Replacement Gasket
5058
1239
5590

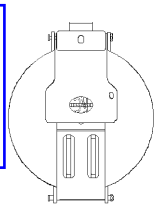

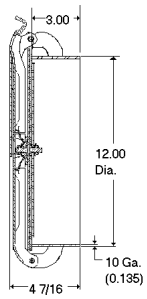

Applications: Cleanout, Fill Opening, Inspection Cover, Sampling Port
Locations: Conveyors, elevator legs, hoppers, silos, spouting, storage tanks and more
Features: Ideal inspection port for conveying systems; locking hatch; no tools required to open
Avg ship weight: 17 lbs **Overall Height:** 4 1/2" approximate

Also available in wing-nut style similar to LH and LW series

LD 16" Non-pressure manway / quick access inspection door

Cover Material Contact / External	Weld Ring	Gasket	Vent
1 Steel / Steel	0 None	1 Buna N	0 No Vent
2 Aluminum / Plated	1 3" x 3/16" Steel	2 Teflon Envelope	
3 SS304 / SS304	2 3" x 1/4" Aluminum	3 Viton	
4 SS316 / SS304	3 3" x 3/16" SS304	4 Hi–Temp	
5 SS304 / Plated	4 3" x 3/16" SS316	5 White Neoprene	
6 SS316L / SS304	5 3" x 3/16" SS316L	6 EPDM	

Replacement Gasket
1294
2567
3889
2685
3145
4612

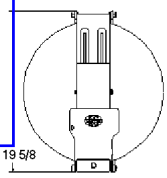

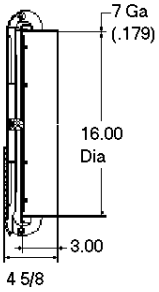

Applications: Cleanout, Fill Opening, Inspection Cover, Manholes, Sampling Port
Locations: Conveyors, elevator legs, hoppers, silos, spouting, storage tanks and more
Features: Ideal inspection port for conveying systems; locking hatch; no tools required to open
Avg ship weight: 25 lbs **Overall Height:** 4 1/2" approximate

KF 16" Non-pressure manway / quick access inspection door

Cover Material Contact / External	Weld Ring	Gasket	Vent
1 Steel / Steel	0 None	1 Buna N	0 No Vent
2 Aluminum / Plated	1 3" x 12 Ga. Steel	2 White Neoprene	
3 SS304 / Plated	2 3" x 1/4" Aluminum	3 Teflon Envelope with Black Neoprene Filler	
4 SS304 / SS304	3 3" x 12 Ga. SS304	4 Hi-Temp	
5 SS316 / SS304	4 3" x 12 Ga. SS316	5 EPDM	
		6 Red Silicon	

Replacement Gasket*
1106
2558
4821
1377
4612
4686

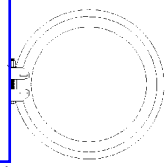

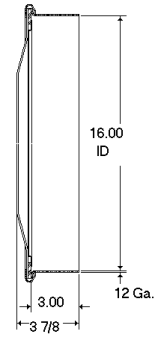

Applications: Bin Entry, Cleanout, Fill Opening, Inspection Cover, Manhole, Sampling Port
Locations: Conveyors, elevator legs, hoppers, silos, spouting, storage tanks and more
Features: Durable construction, easy removal and maintenance; gasket is held in place by retainer clips welded to the cover;
Avg ship weight: 14 lbs **Overall Height:** 3 7/8" approximate

**Note: If the KF has an aluminum weld ring, use #4645 for replacement Buna N Gasket*

KA 16" Non-pressure manway with 10" fill opening

Cover Material Contact / External	Weld Ring	Gasket	Vent
1 Steel / Steel	0 None	1 Buna N*	0 No Vent
2 Aluminum / Plated	1 3" x 12 Ga. Steel	2 Viton	2 NV2001
3 SS304 / Plated	2 3" x 1/4" Aluminum	3 Hi-Temp	3 VE0010
4 SS304 / SS304	3 3" x 12 Ga. SS304		
5 Plated / Plated	4 3" x 12 Ga. SS316		
7 SS316 / SS304			

Replacement Gasket
10" 2561 / 16" 1106
10" 2181 / 16" 1509
10" 2575 / 16" 1377

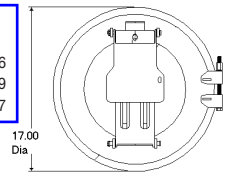

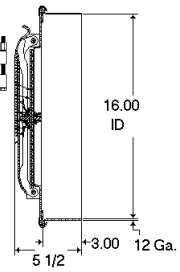

Applications: Access Door, Bin Entry, Cleanout, Fill Opening, Inspection Cover, Manhole, Sampling Port
Locations: Conveyors, elevator legs, hoppers, silos, spouting, storage tanks and more
Features: Durable, lightweight, locking hatch
Avg ship weight: 18 lbs (Steel with weld ring) **Overall Height:** 5 1/4" approximate

** Note: If the KA has an aluminum weld ring, use #4645 for replacement Buna N Gasket*

KG 20" Non-pressure manway / quick access inspection door

Cover Material Contact / External	Weld Ring	Gasket	Vent
1 Steel / Steel	0 None	1 Buna N	0 No Vent
2 SS304 / Plated	1 3" x 12 Ga. Steel	2 Hi-Temp	
3 SS304 / SS304	2 3" x 1/4" Aluminum	3 White Neoprene	
4 SS316 / SS304	3 3" x 12 Ga. SS304		
	4 3" x 12 Ga. SS316		

Replacement Gasket*
1181
2570
4128

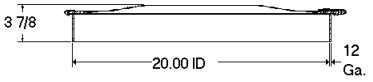

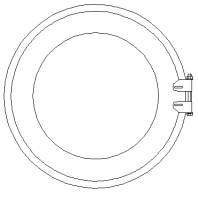

Applications: Bin Entry, Cleanout, Fill Opening, Inspection Cover, Manhole, Sampling Port
Locations: Conveyors, elevator legs, hoppers, silos, spouting, storage tanks and more
Features: Durable construction, easy removal and maintenance; gasket is held in place by retainer clips welded to the cover;
Avg ship weight: 16 lbs (Steel with weld ring) / 8 lbs (Aluminum with weld ring)
Overall Height: 3 7/8" approximate

**Note: If the KG has an aluminum weld ring, use #4646 for replacement Buna N gasket*

1.800.KC.SUPPLY
1.800.527.8775
• 816.753.7676 • Fax 816.753.0444
kcsupply@kcsupply.com

KC SUPPLY

kcsupply.com

Non-Pressure Applications

Jan 2017 - Screen Inserts Available

KB 20" Non-pressure manway with 10" fill opening

Cover Material Contact / External	Weld Ring	Gasket	Vent
1 Steel / Steel	0 None	1 Buna N	0 No Vent
2 SS304 / Plated	1 3" x 12 Ga. Steel	2 EPDM	2 NV2001
3 SS304 / SS304	2 3" x 1/4" Aluminum	3 Hi-Temp	3 VE0010
4 Plated / Plated	3 3" x 12 Ga. SS304	4 Teflon Envelope with Viton FC Gasket	
5 SS316 / SS304	4 3" x 12 Ga. SS316	5 White Neoprene	
		6 Viton	

Replacement Gasket	
10" 2561	20" 1181
10" 2181	20" 2563
10" 2575	20" 2770
10" 2181	20" 2566
10" 3357	20" 4128
10" 2181	20" 2701

Applications: Access Door, Bin Entry, Cleanout, Fill Opening, Inspection Cover, Manhole, Sampling Port
Locations: Conveyors, elevator legs, hoppers, silos, spouting, storage tanks and more
Features: Durable, lightweight, locking hatch
Avg ship weight: 20 lbs (Steel with weld ring) **Overall Height:** 5 1/4" approximate

**Note: If the KB has an aluminum weld ring, replacement gaskets are #4646 for Buna N or #4874 for Viton*

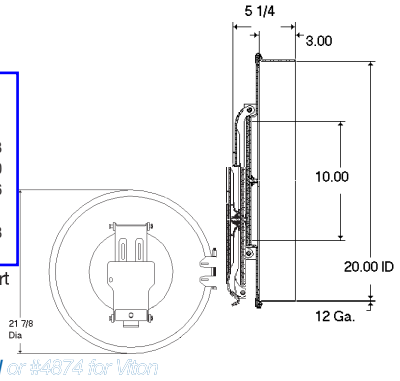

KP 20" Non-pressure manway / quick access inspection door

Cover Material Contact / External	Weld Ring	Gasket	Vent
1 Steel / Steel	0 None	1 Buna N	0 No Vent
2 Aluminum / Plated	1 6" x 3/16" Steel	2 White Neoprene	
3 SS304 / Plated	2 6" x 3/16" Aluminum		
4 SS304 / SS304	3 6" x 3/16" SS304		

Replacement Gasket
1026
1432

Applications: Access Door, Bin Entry, Cleanout, Fill Opening, Inspection Cover, Manhole, Sampling Port
Locations: Conveyors, elevator legs, hoppers, silos, spouting, storage tanks and more
Features: Three cam levers for quick opening; no tools required to open
Avg ship weight: 50 lbs **Overall Height:** 8 1/2" approximate

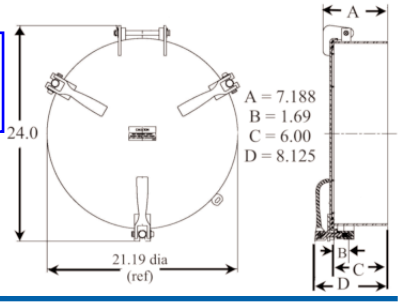

LE 20" Non-pressure manway / quick access inspection door

Cover Material Contact / External	Weld Ring	Gasket	Vent
1 Steel / Steel	0 None	1 Buna N	0 No Vent
2 Aluminum / Plated	1 3" x 3/16" Steel	2 White Neoprene	
3 SS304 / SS304	2 3" x 1/4" Aluminum	3 EPDM	
4 SS316 / SS304	3 3" x 3/16" SS304	4 Viton	
5 SS304 / Plated	4 3" x 3/16" SS316	5 Teflon	
6 SS316L / SS304	5 3" x 3/16" SS316L	6 Hi-Temp	

Replacement Gasket
1026
1432
3622
2573
2551
2726

Applications: Bin Entry, Cleanout, Fill Opening, Inspection Cover, Manhole, Sampling Port
Locations: Conveyors, elevator legs, hoppers, silos, spouting, storage tanks and more
Features: Ideal inspection port for conveying systems; locking hatch; no tools required to open
Avg ship weight: 29 lbs (Steel with weld ring) **Overall Height:** 4 1/2" approximate

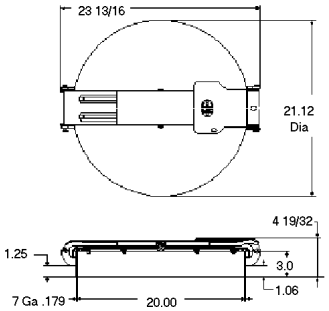

KM 20" Non-pressure manway / quick access inspection door

Cover Material Contact / External	Weld Ring	Gasket	Vent
1 Steel / Steel	0 None	1 Buna N	0 No Vent
2 SS304 / SS304	1 3" x 3/16" Steel	2 White Neoprene	
3 SS316 / SS304	2 3" x 3/16" SS304	3 Viton	
	3 3" x 3/16" SS316	4 EPDM	
		5 Hi-Temp	

Replacement Gasket
1026
1432
2573
3622
2726

Applications: Access Door, Bin Entry, Cleanout, Fill Opening, Inspection Cover, Manhole, Sampling Port
Locations: Conveyors, elevator legs, hoppers, silos, spouting, storage tanks and more
Features: Two additional cam levers for tighter seal; locking latch; low maintenance
Avg ship weight: 42 lbs **Overall Height:** 4 3/8" approximate

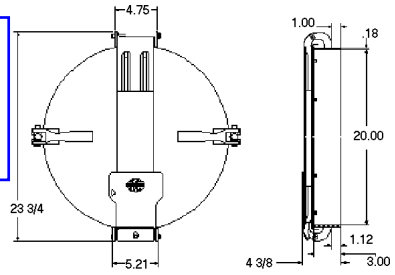

KN 24" Non-pressure manway / quick access inspection door

Cover Material Contact / External	Weld Ring	Gasket	Vent
1 Steel / Steel	0 None	1 Buna N	0 No Vent
2 SS304 / SS304	1 4" x 3/16" Steel	2 White Neoprene	1 VE0010
3 SS316 / SS304	2 4" x 3/16" SS304	3 Hi-Temp	
	3 4" x 3/16" SS316	4 EPDM	
		5 Viton	

Replacement Gasket
1358
4165
2571
4732
3643

Applications: Access Door, Bin Entry, Cleanout, Fill Opening, Inspection Cover, Manhole, Sampling Port
Locations: Conveyors, elevator legs, hoppers, silos, spouting, storage tanks and more
Features: Two additional cam levers for tighter seal; locking latch; low maintenance
Avg ship weight: 52 lbs **Overall Height:** 5 3/8" approximate

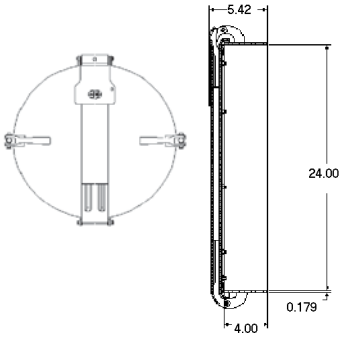

1.800.KC.SUPPLY
1.800.527.8775
• 816.753.7676 • Fax 816.753.0444
kcsupply@kcsupply.com

Non-Pressure Applications

kcsupply.com

LT 30" Non-pressure manway / quick access inspection door

Cover Material Contact / External	Weld Ring	Gasket	Vent	Replacement Gasket
1 Steel / Steel	0 None	1 Buna N	0 No Vent	2549
2 Aluminum / Plated	1 4 1/2" x 3/16" Steel	2 White Neoprene	1 VE0010	4591
3 SS304 / SS304	2 4 1/2" x 3/16" Aluminum			
4 SS316 / Plated	5 4 1/2" x 3/16" SS304			
	7 4 1/2" x 3/16" SS316			

Applications: Access Door, Bin Entry, Cleanout, Fill Opening, Inspection Cover, Manhole, Sampling Port
Locations: Conveyors, elevator legs, hoppers, silos, spouting, storage tanks and more
Features: Nine (9) quick opening cam levers for secured seal
Avg ship weight: 90 lbs **Overall Height:** 6 1/2" approximate

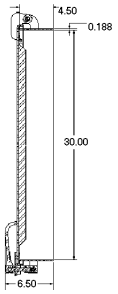

Pressure Applications

MN 8" Full opening pressure fill cover / quick access inspection door – up to 25 PSI

Cover Material Contact / External	Weld Ring	Gasket	Vent	Replacement Gasket
1 Aluminum / Aluminum and Plated	0 None	1 Buna N	0 No Vent	4682
	1 Aluminum			
	2 Steel			

Applications: General purpose access door for non-code applications ≤ 25 PSI
Locations: Conveyors, elevator legs, hoppers, silos, spouting, storage tanks and more
Features: Single strongback and positive locking cam lever makes it easy to open and close
Avg ship weight: 9 lbs **Overall Height:** 5 1/2" approximate

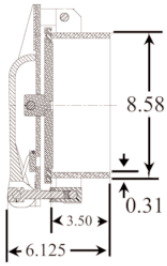

LG 16" Full opening pressure manway / quick access inspection door – up to 12 PSI

Cover Material Contact / External	Weld Ring	Gasket	Vent	Replacement Gasket
1 Steel / Plated	0 None	1 Buna N	0 No Vent	4934
2 SS304 / Plated	1 6" x 7 Ga. Steel	2 Red Silicone		5221
4 SS304 / SS304	2 6" x 7 Ga. SS304	3 White Neoprene		5354
		4 Teflon		2567
		5 EPDM		5648
		6 Hi-Temp		5875

Applications: General purpose access door for non-code applications ≤ 12 PSI
Locations: Conveyors, elevator legs, hoppers, silos, spouting, storage tanks and more
Features: 4 quick-opening adjustable cam levers; safety catch helps prevent accidents when opening against residual pressure; locking tabs enable contents to be secured with tamper-proof seal
Avg ship weight: 40 lbs **Overall Height:** 8 1/4" approximate

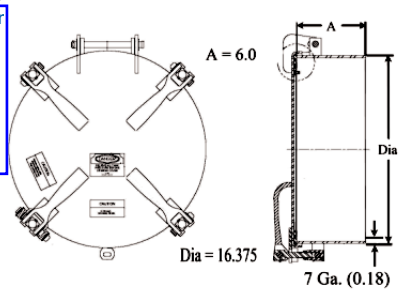

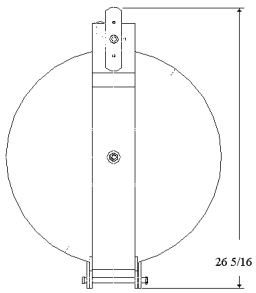

AT 18 7/8" hot products manway for ≤ 14.7 psi working pressure

Cover Material Contact / External	Weld Ring	Gasket	Vent	Replacement Gasket
1 Steel / Plated	0 None	1 Braided Teflon	0 No Vent	1507
	1 11" x 1/4" Steel			
	2 9" x 1/4" Aluminum			

Applications: Hot products, asphalt, hot oil
Features: Single wing-nut assembly gives the cover a tight, secure seal; high-temperature braided Teflon gasket; meets HM198 for hot products
Retrofit kits available for: Fruehauf 18 7/8" asphalt covers
Philadelphia 18" asphalt covers
Knappco 20" asphalt covers
Avg ship weight: 82 lbs **Overall Height:** 17 1/16" approximate

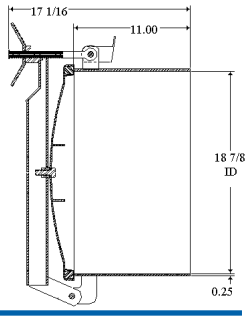

KS 20" Full opening pressure manway / quick access inspection door – up to 12 PSI

Cover Material Contact / External	Weld Ring	Gasket	Vent	Replacement Gasket
1 Steel / Steel	0 None	1 Buna N	0 No Vent	1026
2 SS304 / Plated	1 6" x 3/16" Steel	2 White Neoprene		1432
3 SS316 / Plated	2 6" x 3/16" SS304	3 Hi-Temp		2726
4 SS304 / SS304	3 6" x 3/16" SS316	4 Viton		2573
5 SS316 / SS304	5 12" x 3/16" Steel			

Applications: General purpose access door for non-code applications ≤ 12 PSI
Locations: Conveyors, elevator legs, hoppers, silos, spouting, storage tanks and more
Features: 6 quick-opening adjustable cam levers; safety catch helps prevent accidents when opening against residual pressure; locking tabs enable contents to be secured with tamper-proof seal
Avg ship weight: 52 lbs **Overall Height:** 6" approximate

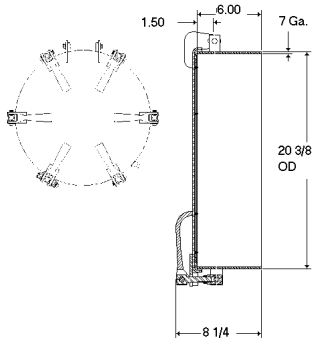

1.800.KC.SUPPLY
1.800.527.8775
• 816.753.7676 • Fax 816.753.0444
kcsupply@kcsupply.com

Pressure Applications

kcsupply.com

MJ 20" Full opening pressure manway / quick access inspection door – up to 18 PSI

Cover Material Contact / External	Weld Ring	Gasket	Vent	Replacement Gasket
1 Steel/Plated	0 None	1 Buna N	0 No Vent	4683
2 SS304 / Plated	1 6" x 3/16" Steel	2 White Neoprene		4684
3 SS316 / Plated	2 6" x 3/16" SS304			
4 SS304 / SS304	3 6" x 3/16" SS316			
5 SS316 / SS304				

Applications: General purpose access door for non-code applications ≤ 18 PSI
Locations: Conveyors, elevator legs, hoppers, silos, spouting, storage tanks and more
Features: 6 quick-opening adjustable cam levers; safety catch helps prevent accidents when opening against residual pressure; locking tabs enable contents to be secured with tamper-proof seal
Avg ship weight: 52 lbs **Overall Height:** 8 1/4" approximate

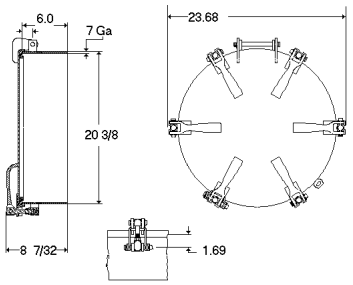

MZ 20" Full opening pressure manway/quick access inspection door - up to 25 PSI

Cover Material Contact / External	Weld Ring	Gasket	Vent	Replacement Gasket
1 Steel / Plated	0 None	1 Buna N	0 No Vent	2244
	1 6" x 3/16" Steel	2 Teflon Braided		5761

Applications: Asphalt, hot oil, general purpose access door for non-code applications ≤ 25 PSI
Locations: Conveyors, elevator legs, hoppers, silos, spouting, storage tanks and more
Features: 6 quick-opening adjustable cam levers; safety catch helps prevent accidents when opening against residual pressure; locking tabs enable contents to be secured with tamper-proof seal
Avg ship weight: 75 lbs **Overall Height:** 8 3/4" approximate

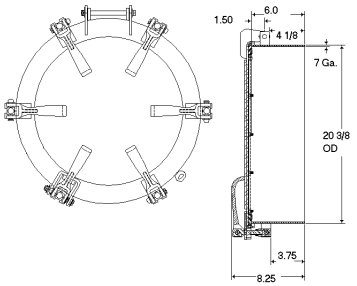

LM 20" Full opening pressure manway / quick access inspection door - up to 30 PSI

Note: In 2010, the LM series changed with "Sure Seal" cast onto cover and usage of nylon wear plates

Cover Material Contact / External	Weld Ring	Gasket	Vent	Replacement Gasket
1 Aluminum / Plated	0 None	5 White Neoprene	1 No Vent	9209
2 Aluminum / SS304	1 6" x 1/4" Aluminum	6 Black Buna N		9821
	2 6" x 3/16" Steel			

Applications: Cement, chemical, crude oil, dry food products, salt, sand and other general applications with a working pressure ≤ 30 PSI
Locations: Cargo tanks, conveyors, elevator legs, intermodal bulk containers (IBC), rail cars and more
Features: 6 quick-opening adjustable cam levers; safety catch helps prevent accidents when opening against residual pressure; locking tabs enable contents to be secured with tamper-proof seal meets MC307 and DOT-407 (HM183) requirements
Avg ship weight: 55 lbs - Steel weld ring 45 lbs - Aluminum weld ring
Overall Height: 8 1/4" approximate

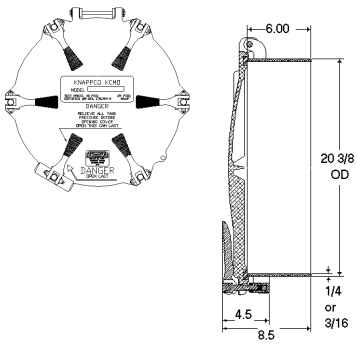

KY 24" Full opening pressure manway/ quick access inspection door - up to 18 PSI

Cover Material Contact / External	Weld Ring	Gasket	Vent	Replacement Gasket
1 Aluminum / Plated	0 None	1 Buna N	0 No Vent	1358
2 Aluminum / Steel	1 4" x 3/16" Steel	2 White Neoprene		4165
	2 4" x 3/16" Aluminum	V Viton*		3643
	3 4" x 3/16" SS304	S Silicone*		2190
	4 4" x 3/16" SS316			

Applications: Cement, chemical, crude oil, dry food products, liquids, salt, sand and other general applications with a working pressure ≤ 18 PSI
Locations: Cargo tanks, conveyors, elevator legs, intermodal bulk containers (IBC), rail cars and more
Features: Nine (9) quick-opening cam levers; safety catch helps prevent accidents when opening against residual pressure; locking tabs enable contents to be secured with tamper-proof seal
Avg ship weight: 70 lbs **Overall Height:** 6 1/4" approximate
** Note: The viton and silicone gasket must be ordered as an extra gasket and not as part of a complete unit*

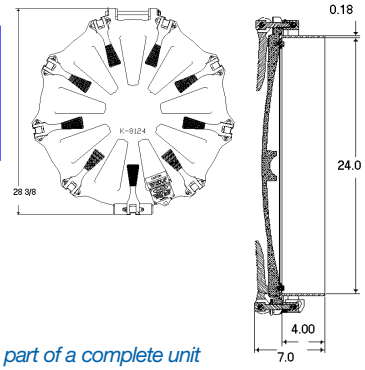

KZ 24" Full opening pressure manway / quick access inspection door - up to 30 PSI

Cover Material Contact / External	Weld Ring	Gasket	Vent	Replacement Gasket
1 Aluminum / Plated	0 None	1 Buna N	0 No Vent	1358
2 Aluminum / Steel	1 4" x 3/16" Steel	2 White Neoprene		4165
	2 4" x 3/16" SS304	V Viton*		3643
		S Silicone*		2190

Applications: Cement, chemical, crude oil, dry food products, liquids, salt, sand and other general applications with a working pressure ≤ 30 PSI
Locations: Cargo tanks, storage tanks, rail cars and more
Features: 9 quick-opening adjustable cam levers; safety catch helps prevent accidents when opening against residual pressure; locking tabs enable contents to be secured with tamper-proof seal
Avg ship weight: 75 lbs **Overall Height:** 6 1/4" approximate
** Note: The viton and silicone gasket must be ordered as an extra gasket and not as part of a complete unit*

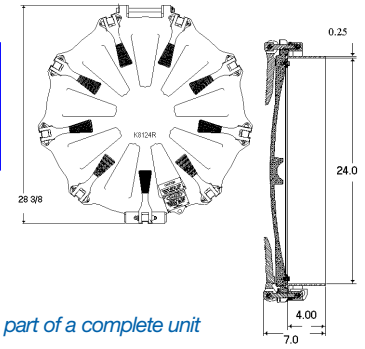

1.800.KC.SUPPLY
1.800.527.8775
• 816.753.7676 • Fax 816.753.0444
kcsupply@kcsupply.com

Pressure Relieving Applications

kcsupply.com

LJ 10" pressure-relieving fill cover — relieves pressure from 3 PSI to 5 PSI

Cover Material Contact / External	Weld Ring	Gasket	Vent	Replacement Gasket
1 SS304 / SS304	0 None	1 Buna N	0 No Vent	3429
2 Steel / Steel	1 3" x 10 Ga. SS304	2 Viton	1 NV2001	4949
3 Aluminum / Plated	2 3" x 10 Ga. Steel	3 Teflon Envelope with Neoprene	3 VE0008	3956
	3 3" x 0.190" Aluminum	4 White Neoprene		4868

Applications: Cleanout, Fill Opening, Inspection Cover, Sampling Port

Features: Spring-loaded fill cap provides positive seal under normal operation; eliminates flutter during emergency pressure release; additional venting capabilities; rated emergency venting capacity 191,268 CFH at 5 PSI

Avg ship weight: 16 lbs **Overall Height:** 4 1/2" approximate

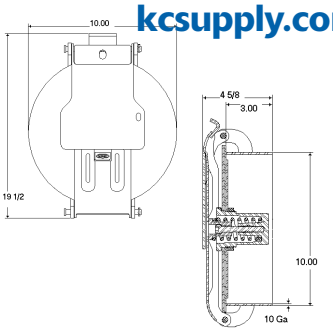

Pressure / Vacuum Relieving Tank Hatch

HA1110

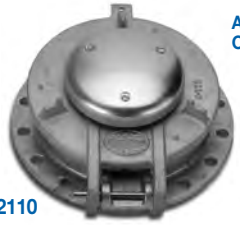

HA2110

HA 8" full opening pressure / vacuum relieving tank hatch

Base Contact / External	Cover	Dome	Pressure Option
1 Steel, Weld, Straight	1 Plated Steel	1 Plated steel	0 None
2 Cast Iron, Flanged, Sloped			

Relieves pressure at 1.5 oz / sq inch and vacuum at 0.5 oz/sq inch

Applications: Baghouse, food products, grain elevators, industrial products, silos

Features: Full opening cover can be used for sampling or inspection; available with bolt-on flanged base or straight weld-on base; dependable design is easy to maintain pressure relief of 46.4 sq inch free area and vacuum relief of 15.9 sq inch free area

Avg ship weight: 14 lbs (flanged base) / 19 lbs (weld ring)

Overall height: 5 1/4 weld base / 4 5/8" flanged base

Replacement Gasket	Dome	Cover
Black Neoprene	1683	1676
White Neoprene	6769	6770

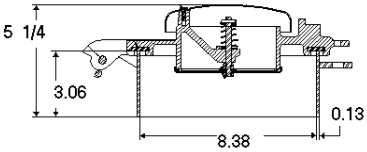

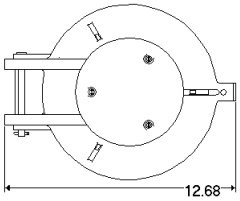

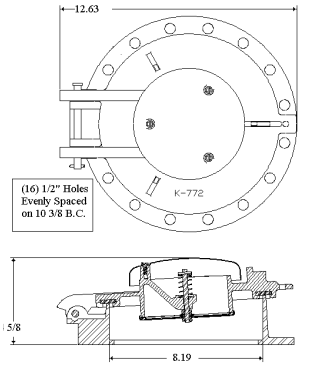

HC 20" full opening pressure / vacuum relieving tank hatch

Base	Cover	Dome	Pressure Option
1 Cast Aluminum	1 Cast Aluminum	1 plated steel dome	0 1 oz aluminum dome
		2 cast aluminum dome (only available with 1 oz setting)	0 2 oz steel dome
			1 4 oz steel dome
			2 5 oz steel dome
			3 6 oz steel dome
			4 8 oz steel dome

Replacement Gasket	Dome	Cover
Black Neoprene	1664	1165
White Neoprene	1160	1163

Applications: Baghouse, food products, grain elevators, industrial products, silos

Features: Full opening cover can be used for sampling or inspection; available with bolt-on flange only. Pressure relief of 291 sq inch free area and vacuum relief of 78.5 sq in free area. Not for use with hazardous materials; product can be emitted when relieving pressure

Overall height: 10 1/4" approximate

Avg ship weight: HC1120 = 40 lbs
HC1110 = 60 lbs
HC1111 = 100 lbs

Vacuum Setting (not adjustable): 0.5 oz / sq in. all models

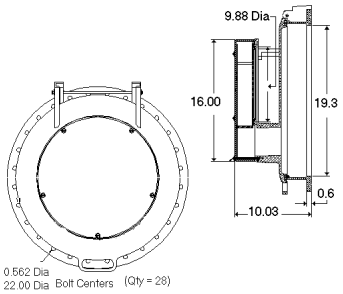

HH 24" full opening pressure / vacuum relieving tank hatch

Pressure Settings	Vacuum Settings	Gasket
2.0 oz through 29.0 oz (increments of 1.0 oz)	0.5 oz through 9.0 oz (increments of 1.0 after the 1.0 oz setting) Std Vacuum setting is 0.5 oz	White Food Grade (FDA Approved)

Applications: Baghouse, food products, grain elevators, industrial products, silos

Features: All-aluminum contact parts eliminate corrosion; no internal hardware to contaminate products; weather hood provides protection from elements; palm nuts allow for quick, easy opening; large 24" opening provides higher venting capacity and improved access into equipment.

Overall height: 13" approximate **Avg ship weight:** 81 lbs

Warning: Cover should be inspected at least once each month to ensure proper operation and properly functioning hardware.The weather hood should be inspected for damage. Replace missing or damaged items.

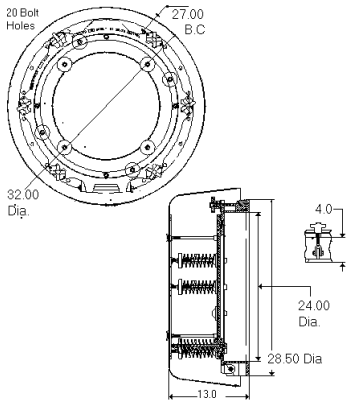

1.800.KC.SUPPLY
1.800.527.8775
• 816.753.7676 • Fax 816.753.0444
kcsupply@kcsupply.com

24” HH Series PRV Tank Hatch Stand Off Tube

Internally-configured “Stand Off Tube” provides a buffer between the storage bin / tank and the mounted PRV hatch.

HH PRV Tank Hatch
mounted onto the flanges of the
Stand Off Tube

Features and Benefits

- Flanged with matching bolt pattern of the 24” HH Series for easy installation
- Stainless steel construction to withstand harsh chemicals
- Extends the life of the PRV’s gaskets as well as the aluminum casting.
- Minimal affect on the air flow rate
- Field tested including engineering tests
- Reduces concern about cleaning agent since the tube increases the distance from the tank and CP
- Internal configuration acts as a buffer between the tank and the PRV
- Standard length of 24 inch with other lengths available

Approximate Weight for 24” Tall SOT 110 lbs

For More Information:
1.800.527.8775
www.kcsupply.com

1.800.KC SUPPLY
kcsupply@kcsupply.com

MANHOLE & FILLCOVER OPTION INFORMATION

		MODEL PREFIX																					
		LH	LA	LW	LB	LS	LD	LE	KF	KG	KN	KM	KA	KB	LT	MN	LM	KS	MJ	LJ	KY	KZ	HA	HC	HH
AVAILABLE SIZES	6"	X																							
	8"		X	X												X							X		
	10"				X															X					
	12"					X																			
	16"						X		X	X															
	16" w/ 10" Fill Opening												X												
	20"							X				X					X	X	X					X	
	20" w/ 10" Fill Opening													X											
	24"										X										X	X			X
	30"														X										
PRESSURE TYPE	NON-PRESSURE	X	X	X	X	X	X	X	X	X	X	X	X	X	X										
	PRESSURE															X	X	X	X		X	X			
	PRESSURE RELIEVING																			X					
	PRESSURE/VACUUM																						X	X	X
LATCH TYPE	CLAMP RING								X	X			X	X											
	WING NUT	X		X																					
	STRONGBACK		X		X	X	X	X							X					X					
	STRONGBACK W/ CAMS										X	X				X									
	MULTIPLE CAMS																X	X	X		X	X			
COVER MATERIAL	CARBON STEEL	X	X	X	X	X	X	X	X	X	X	X	X	X	X			X	X	X					
	PLATED STEEL																								
	ALUMINUM				O		O	O	O				O			X	X				X	X			
	304SS	O	O	O	O	O	O	O	O	O	O	O	O	O	O			O	O	O					
	316SS	O	O	O	O	O	O	O	O	O	O	O	O	O				O	O						
WELD RING MATERIAL	CARBON STEEL	X	X	X	X	X	X	X	X	X	X	X	X	X	X	O		X	X	X	X	X			
	PLATED STEEL																								
	ALUMINUM				O		O	O	O				O			X	X				O	O			
	304SS	O	O	O	O	O	O	O	O	O	O	O	O	O	O			O	O	O	O	O			
	316SS	O	O	O	O	O	O	O	O	O	O	O	O	O				O	O		O	O			
GASKET TYPE	BUNA	X	X	X	X	X	X	X	X	X	X	X	X	X	X	X	X	X	X	X	X	X			
	NEOPRENE	O	O	O	O	O	O	O	O	O	O	O		O	O		O	O	O	O					
	VITON		O		O		O	O			O	O	O	O			O	O							
	EPDM	O			O		O	O	O		O	O													
	HI TEMP	O	O	O	O	O	O	O	O	O	O	O	O	O				O							
	TEFLON	O	O		O		O	O																	

X = STANDARD PRODUCT O = AVAILABLE OPTION

SOME OPTIONS MAY REQUIRE EXTENDED LEAD TIME. PLEASE CALL FOR SPECIFIC AVAILABILITY.

KC SUPPLY
1.800.527.8775

Available from:
KC Supply Co Inc
Ph 1.800.527.8775
1.800.KC.SUPPLY

www.kcsupply.com
kcsupply@kcsupply.com

AVAILABILITY OF ALL MODELS AND OPTIONS IS SUBJECT TO CHANGE WITHOUT NOTICE.
BUYER ASSUMES SOLE RESPONSIBILITY FOR DETERMINING APPLICATION SUITABILITY FOR ANY PRODUCT ORDERED.

General Characteristics of Gasket Materials

Common Names	Buna N/Nitrile	EPDM	Hi-Temp	Neoprene	Silicone	Teflon	Viton
Compression Set	Good	Good	Fair	Good	Good	Good	Good
Abrasion Resistance	Excellent	Good	Good	Excellent	Excellent	Good	Good
Solvent Resistance	Good to Excellent	Poor	Fair to Good	Fair	Fair	Excellent	Excellent
Oil Resistance	Good to Excellent	Poor	Good	Fair	Fair	Excellent	Excellent
Low Temp Usage (°F)	+30 to -40	-20 to -60	Varies	+10 to -50	+10 to -50	+30 to -40	+10 to -10
High Temp Usage (°F)	Up to 250	Up to 350	Up to 700	Up to 250	Up to 250	Up to 250	400 to 600
Aging – Weather (Sunlight)	Poor	Excellent	Good	Good	Good	Excellent	Excellent

In-stock solutions for common non-pressure and pressure applications...

- Access Door
- Bin Entry
- Cleanout Ports
- Fill Openings
- Inspection Covers
- Manholes
- Sampling Ports

Common installation locations include...

- Bag Houses
- Conveyors
- Elevator Legs
- Floor Openings
- Garners
- Hoppers
- Mixers
- Scales
- Silos
- Spouting
- Tanks

KC SUPPLY
Knowledgeable Customer Service

Trust the team that has The parts you need, When you need them...

1.800.KCSUPPLY
1.800.527.8775
816.753.7676
Fax: 816.753.0444
www.kcsupply.com